LL137 LENGTH MATRIX	
PART #	**LENGTH IN INCHES [mm]**
LL137X03	3.0 [76 mm]
LL137X06	6.0 [152 mm]
LL137X12	12.0 [305 mm]
LL137X18	18.0 [457 mm]
LL137X24	24.0 [610 mm]
6" INCREMENTS UP TO MAX OF 96"	

X REFERS TO LENS TYPE: D,E,F,G

REVISIONS			
REV.	DESCRIPTION	DATE	DCN NO
-	FOR QUOTING PURPOSES ONLY		

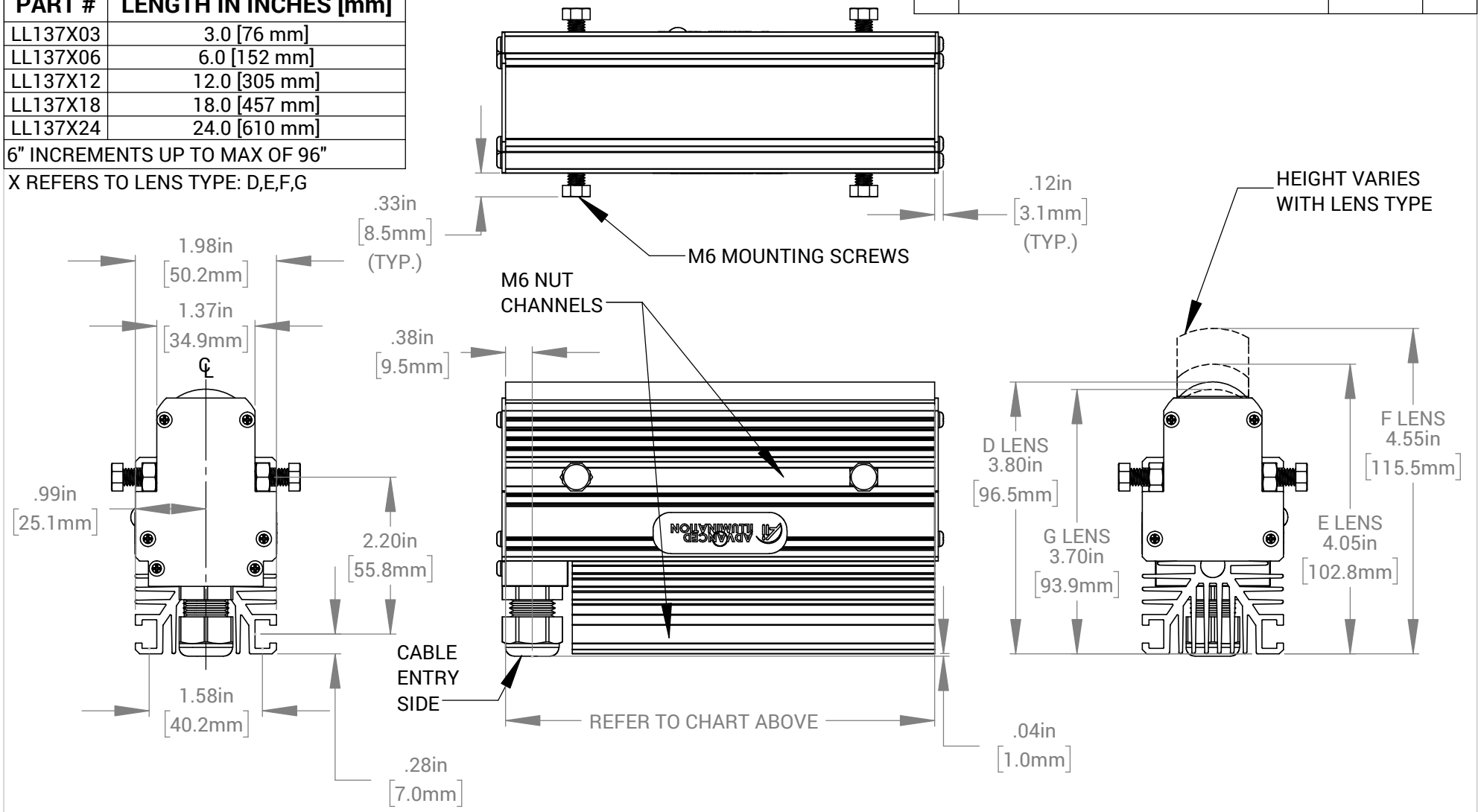

6" UNIT WEIGHT: 2.2 lbs

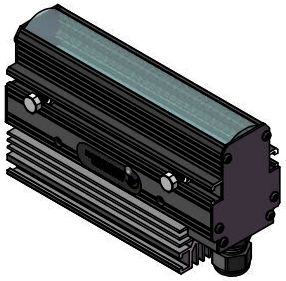

FOR REFERENCE ONLY

PROPRIETARY AND CONFIDENTIAL
THESE DRAWINGS AND SPECIFICATIONS ARE THE EXCLUSIVE PROPERTIES OF ADVANCED ILLUMINATION INCORPORATED ISSUED IN STRICT CONFIDENCE AND SHALL NOT, WITHOUT THE PRIOR WRITTEN PERMISSION OF ADVANCED ILLUMINATION INC BE REPRODUCED, COPIED OR USED FOR ANY PURPOSE WHATSOEVER EXCEPT THE MANUFACTURE OF ARTICLES FOR ADVANCED ILLUMINATION INC

CUT USING:	
NEXT ASSY	USED ON
APPLICATION	

UNLESS OTHERWISE SPECIFIED:
SURFACE SHOULD BE FREE OF SCRATCHES, BURRS, AND DENTS
DIMENSIONS ARE IN: INCHES
TOLERANCES
FRACTIONAL ± 1/16
ANGULAR: MACH ± 1 BEND ± 1
TWO PLACE DECIMAL ± .010
THREE PLACE DECIMAL ± .005
MAKE FROM
-

	DATE	NAME
DRAWN	26-FEB-21	Ai
CHECKED	--	--
APPROVED	--	--
MATERIAL -		
FINISH -		

ADVANCED ILLUMINATION
440 STATE GARAGE ROAD,
ROCHESTER, VERMONT 05767

TITLE:
DRAWING, INSTALLATION, LL137

SIZE	DWG. NO.	REV
A	LL137	-

SCALE: NTS | C CODE: - | SHEET 1 OF 1

O:\DESIGN ENGINEERING\INSTALLATION MODELS\LINE LIGHTS\LL137\

1160.050006 REV-